PRODUCT SHEET

Description:
Tool For Inserting Screw-In Bushings M6

Item number:
12.10.305-1

Units	Box	Carton	HS Code	Barcode
Pcs.	1	50	8207801900	5704866027120

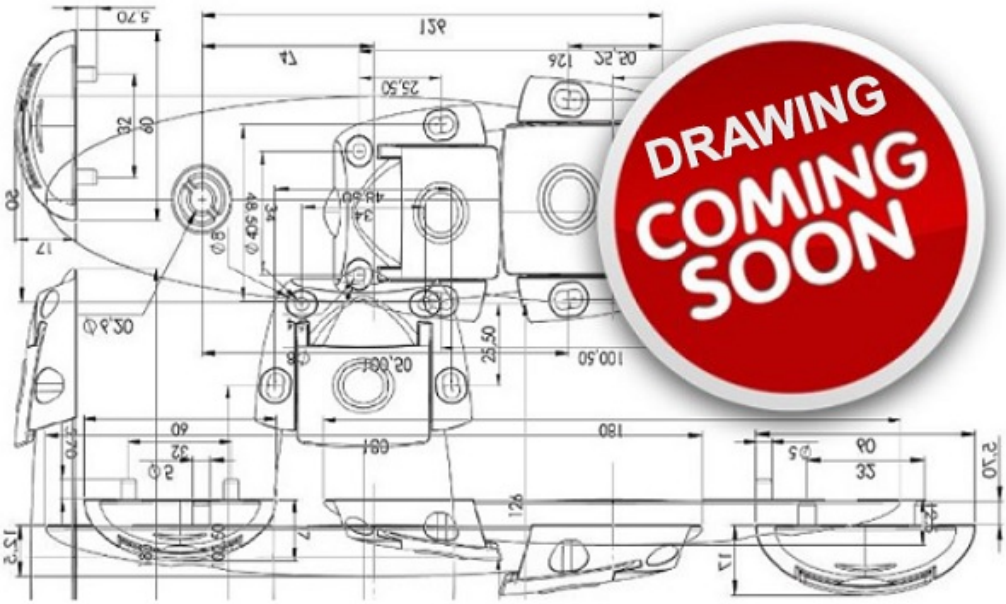

SISO A/S
Mileparken 11
DK-2740 Skovlunde
Denmark
VAT: DK 24786013

Phone +45 45 830 900

www.siso.dk
siso@siso.dk

Danske Bank
Nytorv Branch
Copenhagen
SWIFT: DABADKKK

Account no.
4180 3112 112936
IBAN Account
DK7230003112112936